Product Data Sheet
February 2015
SD 1500-0E14

Damcos™ Local Power Unit

General

Damcos™

EMERSON™
Process Management

Description

The LPU - (Local Power Unit) - is an integrated electro-hydraulic system for remote control of valves and actuators.

The LPU is especially developed for mounting direct on valve actuators, primarily on board ships.

The LPU consists of a hydraulic pump which is driven by an asynchronous capacitor motor and several valve functions.

The LPU offers installation in both safe and hazardous area in two basic versions:

- LPU-S (fail safe) for single acting actuator
- LPU-D (fail set) for double acting actuator

Features

The LPU version 2:

- match Damcos actuators, see page 4
- has no external indication cable
- easy de-airing and oil filling
- plugs for oil checking
- adjustable flow 250 - 1000 ml/min.
- one size for all actuators
- low energy consumption by means of automatic pump reduce “patented”

Note!
If LPU is to be mounted on BRC 125 or BRCF 125, the LPU has to be bulkhead mounted or supported otherwise, because of the size differences of the LPU and the actuator.

It can be necessary to use extension tanks, if pipe has to be use, because of handpump or bulk mounting. Please contact Emerson for further information.

LPU with an LED Position Indicator
LPU (except the Ex version) is available with an IP 68 LED indicator, showing clear RED or GREEN light when the valve is CLOSED respectively OPEN.

This may especially be useful if LPU is operated from a local handpump, were the LPU is mounted in a distance so the indication of the actuator is not visible. The LED must be supplied with 24 VDC.

For electrical details and diagrams, please see the datasheets for P-NET controlled LPU and Power controlled LPU.

Controls

The LPU system is designed to be controlled by two electrically different types of controls:

- Power controlled
- P-NET® bus controlled*

*) Not LPU F

For further information about the two controls please see separate data sheets.

Opening/Closing

The LPU is fitted with a variable hydraulic pump enabling you to reduce the flow and thus the actuator speed.

The pump flow and consequently the required motor power are automatically reduced whenever the pump pressure exceeds a certain point. This does not influence the operating time of the valve essentially, as the valve only requires high torque in the end positions. See examples of valve operation:

Valve Operation

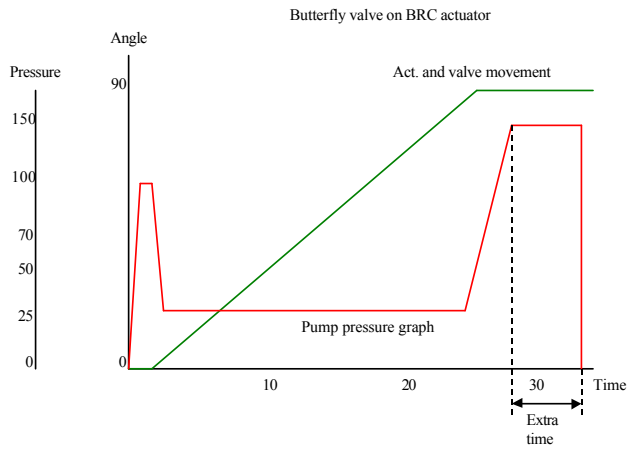

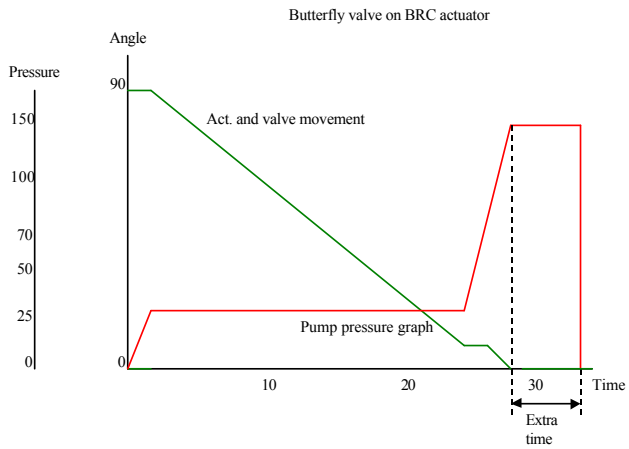

Valve is fully closed:

- *Pressure will be built up until necessary break away torque is obtained (98 bar)*
- *Valve begins to open and only running torque is required from the LPU, pressure is reduced to 25 bar.*
- *Pressure is 25 bar during running of the valve.*
- *Valve reaches full open, actuator reaches end position and pressure will start building up.*
- *LPU reaches max. pressure 150 bar, safety valve releases flow to tank.*
- *The extra time is passed and the motor/- pump stops.*
- *Valve is locked in position by a double pilot operated non-return valve.*

Valve is fully Open:

- *Pressure will be built up until necessary running torque is obtained. (25 bar)*
- *Valve begins to touch the valve disc and more pressure/ torque is required, LPU starts building up pressure to the reset torque. (67 bar)*
- *Pressure builds up to 67 bar and valve starts end closing.*
- *LPU reaches max. pressure 150 bar, safety valve releases flow to tank.*
- *Valve is completely closed.*
- *The extra time is passed and the motor/pump stops.*
- *Valve is locked in position by a double pilot operated non-return valve.*

Hydraulic Specification

Operating speed

The operating duration can be calculated from the oil displacement of the actuator. The LPU can deliver a flow, smoothly manually adjusted from 250 to 1000 ml/min at 50 Hz.

Example

A BRC 250 can be opened in:

min. 50 ml / 1000 ml x 60 sec. = 3.0 sec.,

max. 50 ml / 250 ml x 60 sec. = 12.0 sec.

For adjustment please refer to instruction.

Actuator type:	Oil displacement:	Min. operating time (sec.) open/close for LPU-D:		
	ml	**50 Hz**	**60 Hz**	
BRC 125*	26	1.6	1.3	
BRC 250	50	3.0	2.5	
BRC 500	102	6.1	5.1	
BRC 1000	209	13	10	
BRC 2000	400	24	20	
BRC 4000	800	48	40	
BRC 8000	1600	96	80	
BRC 16000	3100	186	154	
KC 65	21	1,35	1,1	
KC 125	82	4,9	4,1	
KC 250	428	25,6	21,2	
KC 325	793	48	40	
KC 400	1700	120	85	
KC 600	33600	216	180	
		Min. operating time (sec.) open for LPU-S:		**Min. closing time**
		50 Hz	**60 Hz**	**N/A**
BRCF 125*	26	4	3	1
BRCF 250	50	8	6	2
BRCF 500	102	15	13	4
BRCF 1000	209	31	26	8
BRCF 2000	400	60	50	16
BRCF 4000	800	120	100	32
BRCF 8000	1600	240	200	64
BRCF 16000	3100	465	388	124
KF 65	21	1,2	1,1	1
KF/KFR 125	82	4,9	4,1	3
KF/KFR 250/150	265	15,9	13,2	10
KF/KFR 250	428	25,6	21,2	17

** Only bulkhead mounted on LPU. Please note that min. time is calculated value. BRCF spring and value difference can change the actual time.*

Working pressure:	135 bar
Relief valve cracking pressure:	150 bar
Safety valve pressure:	210 ± 40 bar
Max. running time:	Up to 10 min. depending on ambient temp. (max. 25% duty cycle)
Enclosure rating:	IP 68, (3 bar in 24 hours) LPU F: IP68, (7 bar in 7 days)
Test pressure:	225 bar
Ambient temperature:	-5°C to 70°C (-25°C to 70°C on request)
Tank volume/ utility volume:	approx. 300 ml. / 120 ml.
Weight:	18 kg LPU F: 23 kg (plugged) or 26 kg (cable entry version)

Electrical Specification

	230 V AC	110 V AC
Power supply:	230 V AC 50 or 60 Hz ± 20%	110 V AC 50 or 60 Hz ± 10%
Starting current:	4 A at 20°C	9 A
Running current max.:	1,85A at 50 Hz / 2A at 60 Hz	3,5A
Running current at 20°C (220 V 50 Hz):	1.2 A	2.5 A
The solenoid valve in: LPU-S consumes approx.: LPU-D consumes approx.:	 12 W corresponding to 0.07A 9 W corresponding to 0.09 A	 0.08 A 0.17 A

Motor is protected against overheating with internal bimetal switch.

Materials

Electrical housing and tank:	Cast iron
Slides, etc.:	Steel
Screws, sign plate, rivets and bracket:	Stainless steel
Seals:	NBR/PTFE
Cable glands:	Brass/nickel
Hydraulic blocks:	Nodular cast iron

Placement and Tests

The LPU can be placed according to LRS approval:

- ENV2 (closed rooms with temperature, humidity and vibrations).
- ENV3 (closed rooms with heat from other components).
- ENV4 (vibrating machinery and connected pipes).
- ENV5 (open deck). Units on open deck will be coated.

Mounting direction:	Any. (If bulk head mounted: with motor pointing downwards)
Cold test:	Function test at -30°C
Dry test:	70°C
Humidity test:	Static and cyclic for 6 days and nights.
IP-enclosure:	IP 68, 3 bar in 24 hours LPU F: IP68, (7 bar in 7 days)
Vibration test:	5-25 Hz/± 1,6 mm and 25-200Hz ± 4.0 g in three directions
Mechanical shock:	80g for 6 msec.
Salt spray test:	Acc. to class requirement for mounting on deck
EMC test acc. to IACS E10 (1999)	

Mounting on Actuators

- Direct mounting on BRC 250 - 16000, BRCF 250 - 16000, KC 65 - 400 and KF 65-250.
- Mounting on BRC 052, 072 and 092 is via inter mediate block and with external position indication cable.
- Mounting on BRCF Fail Open and KF Fail Open is via special intermediate block.
- Mounting on BRC 125 and BRCF 125 has to be bulkhead mounted or supported otherwise.

Be aware of the pipe dimensions too.

- LPU may be bulk-head mounted via a standard B-block. - It is possible to use a B-block with integrated VPI, (please see illustration). No external indication cable.

Note!

If bulk-head mounted:

Oil level must be checked before starting up the LPU.

LPU must be placed with motor pointing down and breather valve on top, short suction pipe recommend.

The LPU may be emergency operated as if mounted direct on actuator.

Properly de-airing via quick connections on the LPU.

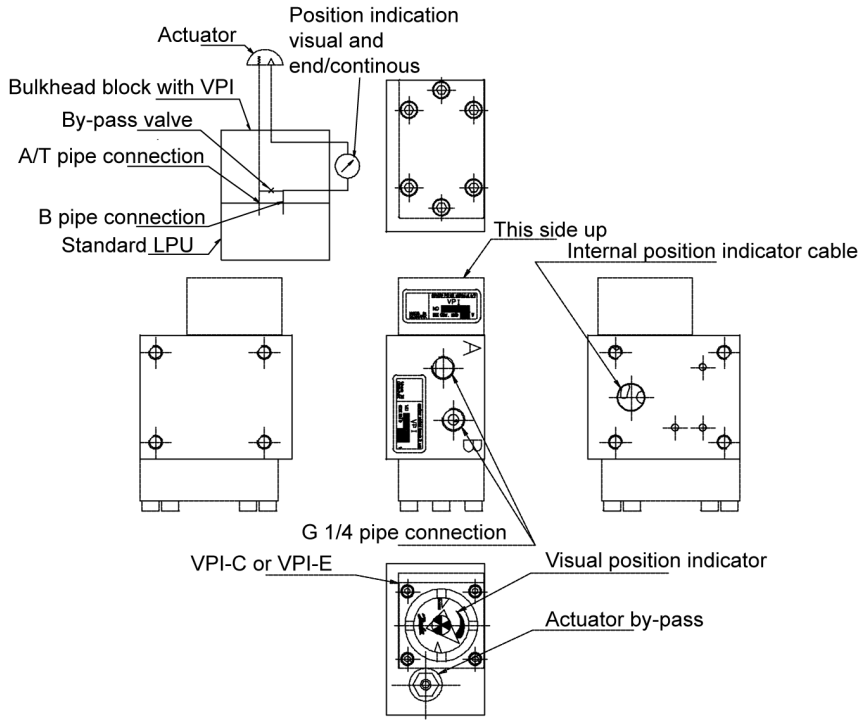

B-VPI block for bulk-head mounted LPU.

Emergency Operation

All units are provided with quick connections for connection of a portable hand pump for emergency operation of the valve. These can be replaced by pipes for permanent connection to hand pump.

On some valve actuators emergency operation is also possible by means of a key or permanently mounted levers.

After emergency operation of the valve the remote control is automatically in charge.

Additional requirements and functions are described in the PDS for the specific product.

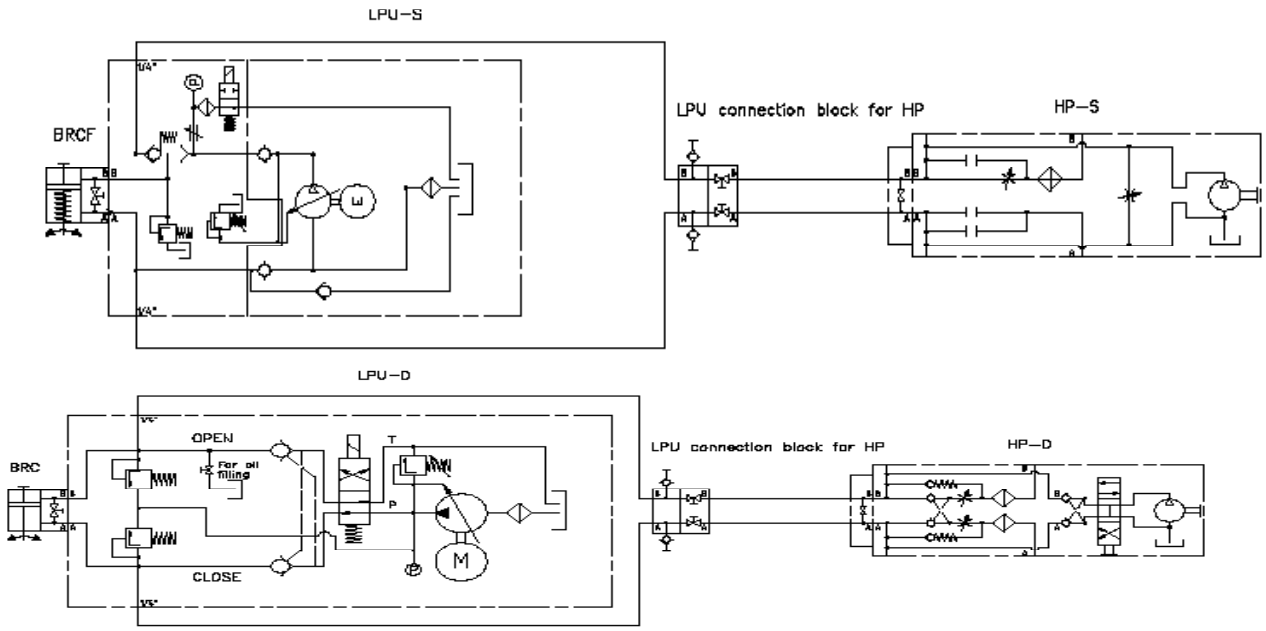

Hand pump for permanent connection. Note maximum length of pipe and requisite size of tank. For further information please see datasheet.

Cable Gland

Application	Thread	Number	Cable min. Ø	Cable max Ø	Screen	IP	Note
P-Net Control*							
230V	M20*1.5	2	8	15	No	68	
P-NET	M25*1.5	2	13	16	Yes	68	
Power Control							
230V	M25*1.5	1	12½	20½	No	68	
Alternative and additional options							
External position indica-tor connection	M16*1.5	(1)	8	10	Yes	68	LPU is delivered with a plug in the concerned thread
Reducer (thinner cable)	M25/M20	(2)				68	f. cabel gland below
P-NET	M20*1.5	(2)	8	11	Yes	68	f. thinner P-NET cable

*) Does not apply to LPU F

Approvals

The LPU is type approved by:

- Lloyds Register of Shipping
- Det norske Veritas
- ABS
- Germanischer Lloyd
- Bureau Veritas
- RINA

Emerson Process Management
Damcos A/S
Aaderupvej 41
DK-4700 Naestved
T +45 5578 7200
F +45 5578 7272

www.EmersonProcesss.com/mtm

Damcos™

EMERSON™
Process Management