www.final-yearprojects.co.cc

www.troubleshoot4free.com/fyp/

JUNE - JULY

2007

Summer Training Report

SUBMITTED BY:

.....

INDEX

ACKNOWLEDGEMENTS

I would firstly wish to thank **Mrs. …….** for allowing me to undergo summer training at NTPC Faridabad , all of the HR team of the Institute for their continued guidance. I would also wish to convey my warm regards to **Mr. ……..** and **Mr. ……..** for providing me with all the knowledge database that I needed for this report.

I would also like to thank Mr. …… , TPO – ……. …… …, for providing me this wonderful opportunity to work with the NTPC family

ABOUT THE COMPANY

Corporate Vision:

"A world class integrated power major, powering India's growth, with increasing global presence"

Core Values:

B-Business Ethics
C-Customer Focus
O-Organizational & Professional pride
M-Mutual Respect and Trust
I- Innovation & Speed
T-Total quality for Excellence

NTPC Limited is the largest thermal power generating company of India. A public sector company, it was incorporated in the year 1975 to accelerate power development in the country as a wholly owned company of the Government of India. At present, Government of India holds 89.5% of the total equity shares of the company and the balance 10.5% is held by FIIs, Domestic Banks, Public and others. Within a span of 31 years, NTPC has emerged as a truly national power company, with power generating facilities in all the major regions of the country.

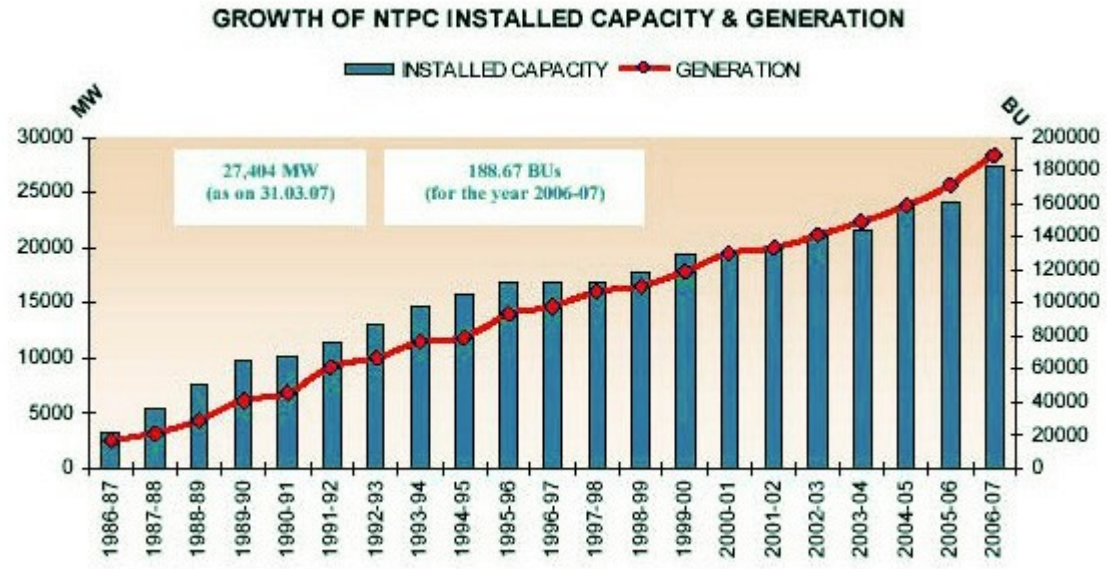

NTPC's core business is engineering, construction and operation of power generating plants. It also provides consultancy in the area of power plant constructions and power generation to companies in India and abroad. As on date the installed capacity of NTPC is 27,904 MW through its 15 coal based (22,895 MW), 7 gas based (3,955 MW) and 4 Joint Venture Projects (1,054 MW). NTPC acquired 50% equity of the SAIL Power Supply Corporation Ltd. (SPSCL). This JV company operates the captive power plants of Durgapur (120 MW), Rourkela (120 MW) and Bhilai (74 MW). NTPC also has 28.33% stake in Ratnagiri Gas & Power Private Limited (RGPPL) a joint venture company between NTPC, GAIL, Indian Financial Institutions and Maharashtra SEB Holding Co. Ltd.

NTPC's share on 31 Mar 2007 in the total installed capacity of the country was 20.18% and it contributed 28.50% of the total power generation of the country during 2006-07.

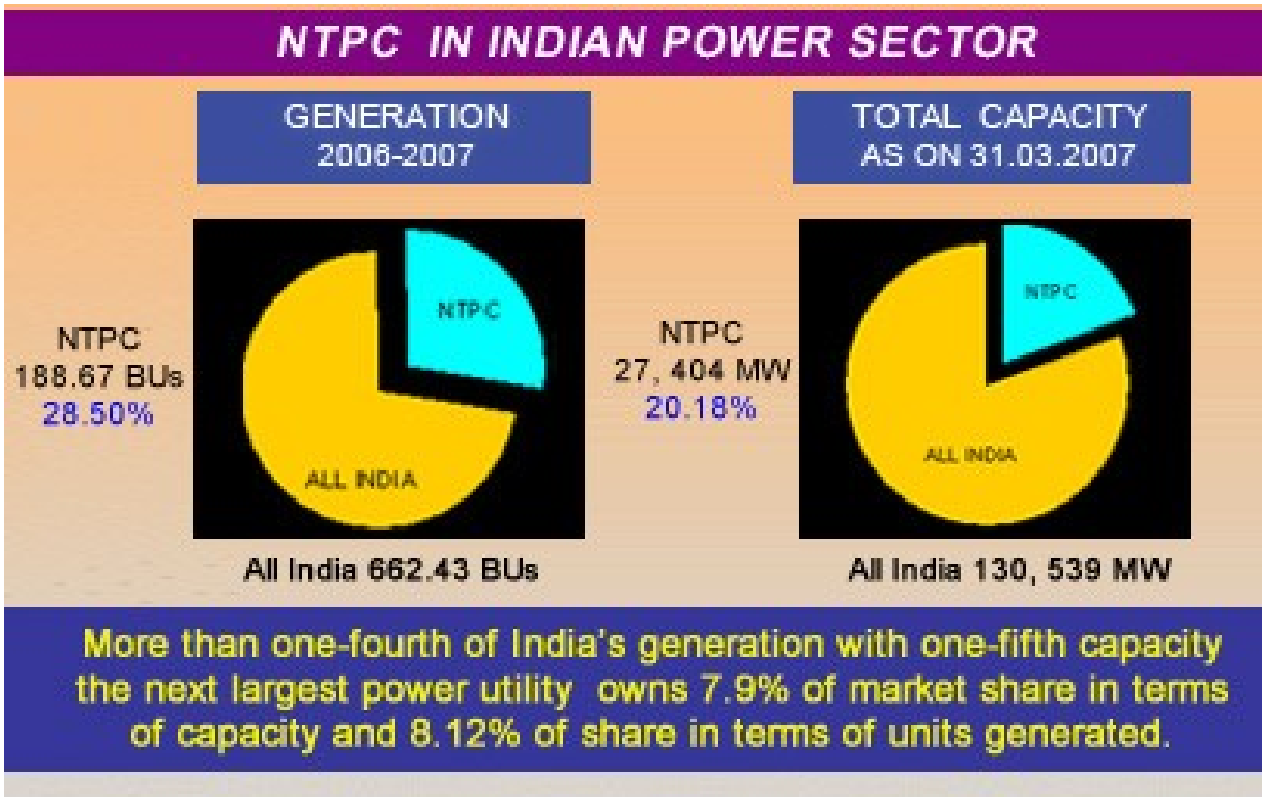

EVOLUTION OF NTPC

1975

NTPC was set up in 1975 with 100% ownership by the Government of India. In the last 30 years, NTPC has grown into the largest power utility in India.

1997

In 1997, Government of India granted NTPC status of "Navratna' being one of the nine jewels of India, enhancing the powers to the Board of Directors.

2004

NTPC became a listed company with majority Government ownership of 89.5%.

NTPC becomes third largest by Market Capitalisation of listed companies

2005

The company rechristened as NTPC Limited in line with its changing business portfolio and transform itself from a thermal power utility to an integrated power utility.

NTPC is the largest power utility in India, accounting for about 20% of India's installed capacity.

NTPC GROUP

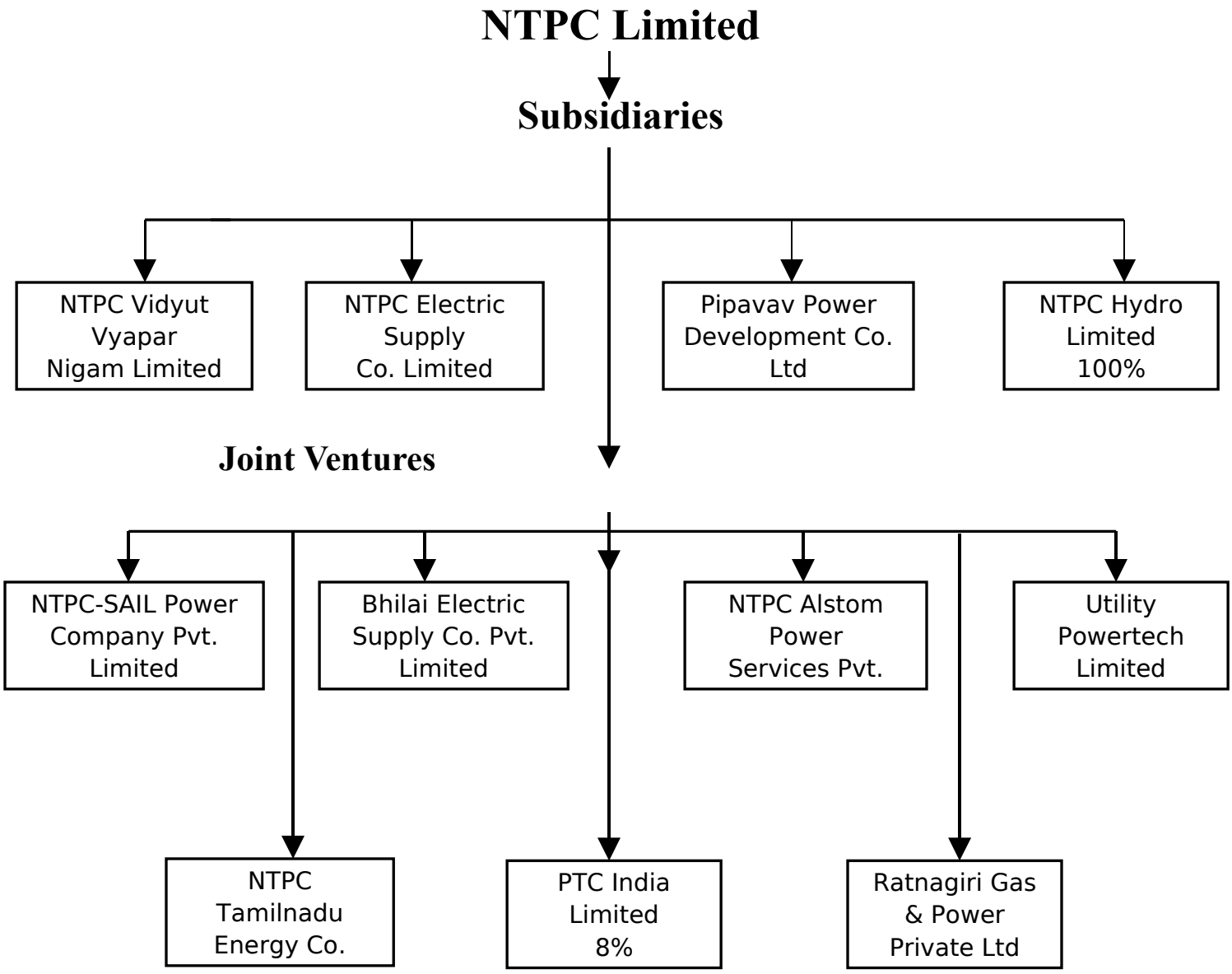
NTPC Limited
Subsidiaries
NTPC Vidyut Vyapar Nigam Limited
NTPC Electric Supply Co. Limited
Pipavav Power Development Co. Ltd
NTPC Hydro Limited 100%
Joint Ventures
NTPC-SAIL Power Company Pvt. Limited
Bhilai Electric Supply Co. Pvt. Limited
NTPC Alstom Power Services Pvt.
Utility Powertech Limited
NTPC Tamilnadu Energy Co.
PTC India Limited 8%
Ratnagiri Gas & Power Private Ltd

INSTALLED CAPACITY

AN OVERVIEW

Projects	No. of Projects	Commissioned Capacity (MW)
NTPC OWNED		
COAL	15	22,895
GAS/LIQ. FUEL	07	3,955
TOTAL	22	26,850
OWNED BY JVCs		
Coal	3	314*
Gas/LIQ. FUEL	1	740**
GRAND TOTAL	26	27,904

*** Captive Power Plant**

NTPC INTERNATIONAL CELL

Keeping its proactive tradition, NTPC launched a separate International Cell to meet the varied needs of IPPs (Independent Power Producers) and other International clients who are looking for a world class service in power sector. The Cell is especially tuned to meet the requirements of International clients in terms of quick response, flexible service options and to deliver value for money.

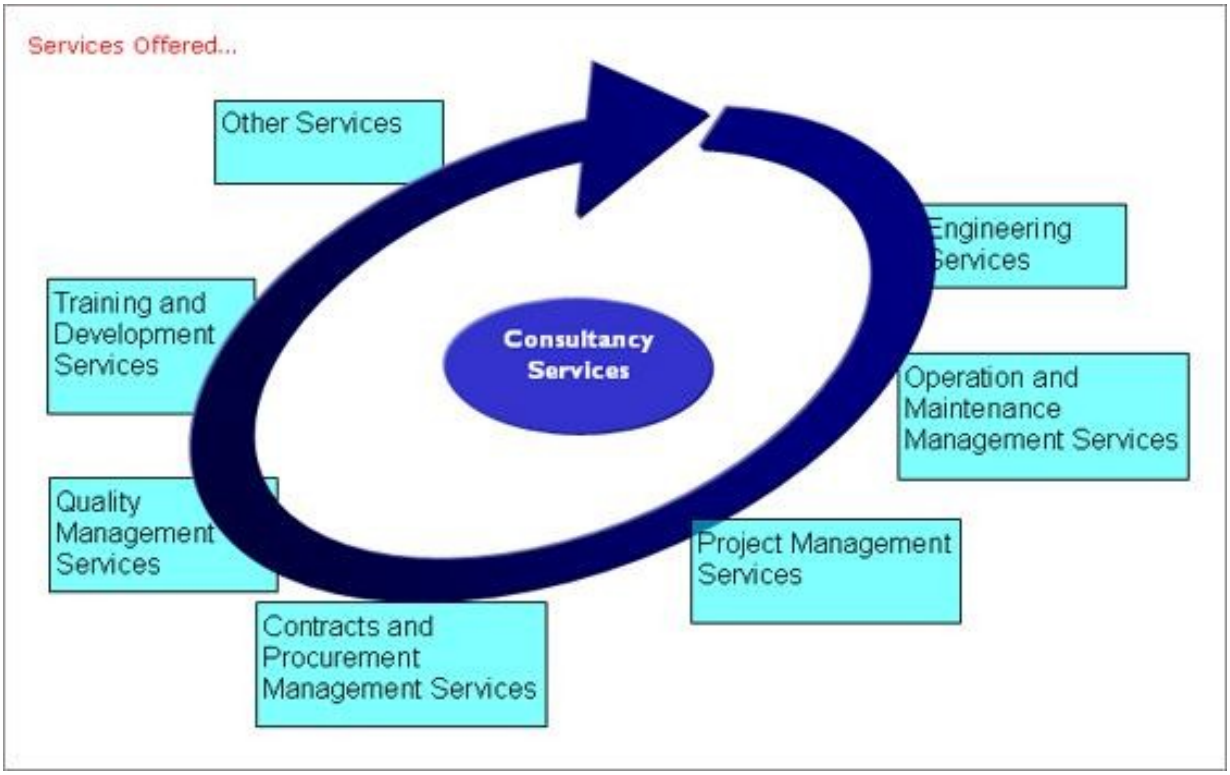

Pursuing Business Opportunities in:

- Sri Lanka
- Saudi Arabia
- UAE
- Iran
- Jordan
- Bahrain
- Egypt
- Malaysia
- Indonesia

- Vietnam
- Thailand
- Sudan
- Nigeria
- Yemen

NTPC OPERATIONS

The operating performance of NTPC has been considerably above the national average. The availability factor for coal stations has increased from 85.03 % in 1997-98 to 90.09 % in 2006-07, which compares favourably with international standards. The PLF has increased from 75.2% in 1997-98 to 89.4% during the year 2006-07 which is the highest since the inception of NTPC.

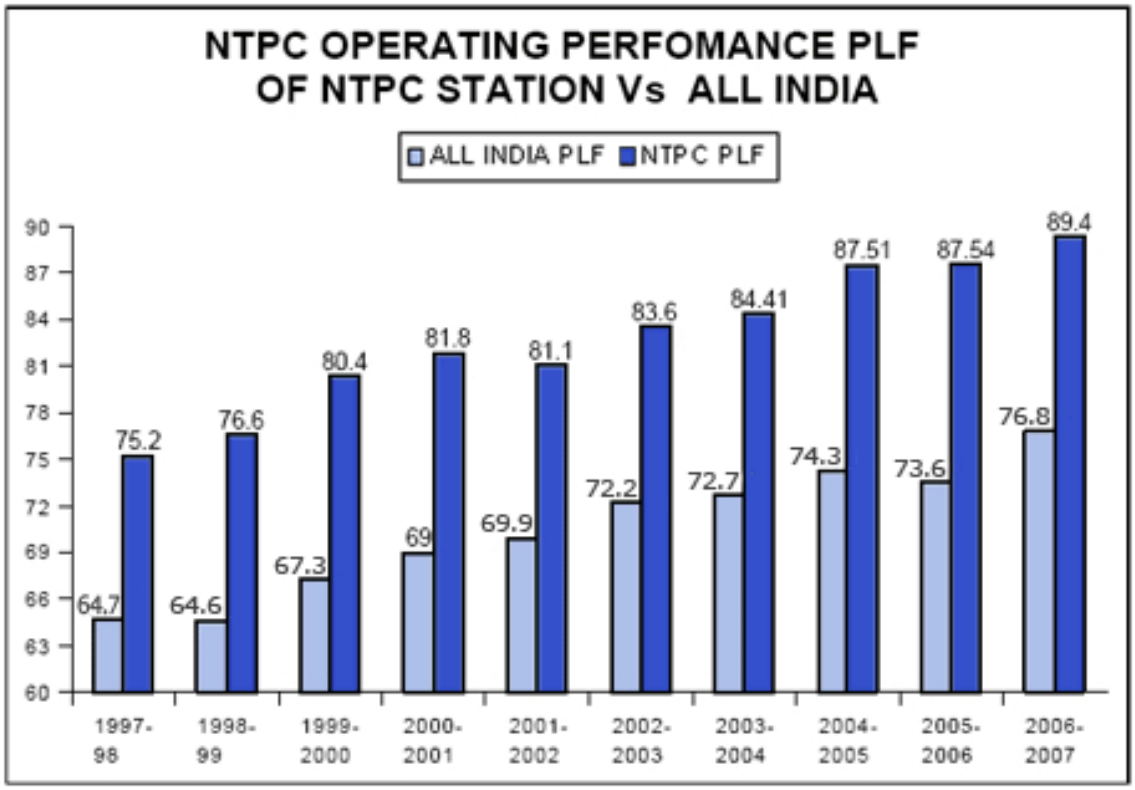

It may be seen from the table below that while the installed capacity has increased by 56.40% in the last nine years, the employee strength went up by only 3.34%

Description	Unit	1997-98	2006-07	% of increase
Installed Capacity	MW	16,84	26,350	56.40

		7		
Generation	MUs	97,609	1,88,674	93.29
No. of employees	No.	23,585	24,375	3.34
Generation/employee	MUs	4.14	7.74	86.95

ECOLOGICAL MONITORING PROGRAMME

NTPC has undertaken a comprehensive Ecological Monitoring Programme through Satellite Imagery Studies covering an area of about 25 Kms radius around some of its major plants. The studies have been conducted through National Remote Sensing Agency (NRSA), Hyderabad at its power stations at Ramagundam, Farakka, Korba, Vindhyachal, Rihand and Singrauli. These studies have revealed significant environmental gains in the vicinity areas of the project as a result of pursuing sound environment management practices. Some of these important gains which have been noticed are increase in dense forest area, increase in agriculture area, increase in average rainfall, decrease in waste land etc. In general, the studies, as such, have revealed that there is no significant adverse impact on the ecology due to the project activities in any of these stations. Such studies conducted from time to time around a power project have established comprehensive environment status at various post operational stages of the project.

USE OF WASTE PRODUCTS & SERVICES -ASH UTILIZATION

Ash is the main solid waste which is put into use for various products and services. NTPC has adopted user friendly policy guidelines on ash utilisation.

In order to motivate entrepreneurs to come forward with ash utilisation schemes, NTPC offers several facilities and incentives. These include free issue of all types of ash viz. Dry Fly Ash / Pond Ash / Bottom Ash and infrastructure facilities, wherever feasible. Necessary help and assistance is also offered to facilitate procurement of land, supply of electricity etc from Government Authorities. Necessary techno-managerial assistance is given wherever considered necessary. Besides, NTPC uses only ash based bricks and Fly Ash portland pozzolana cement

(FAPPC) in most of its construction activities. Demonstration projects are taken up in areas of Agriculture, Building materials, Mine filling etc. The utilisation of ash and ash based products is progressively increasing as a result of the concrete efforts of these groups.

LINE DIAGRAM SHOWING GAS TO ELECTRICITY CONVERSION AT FARIDABAD GAS POWER PLANT

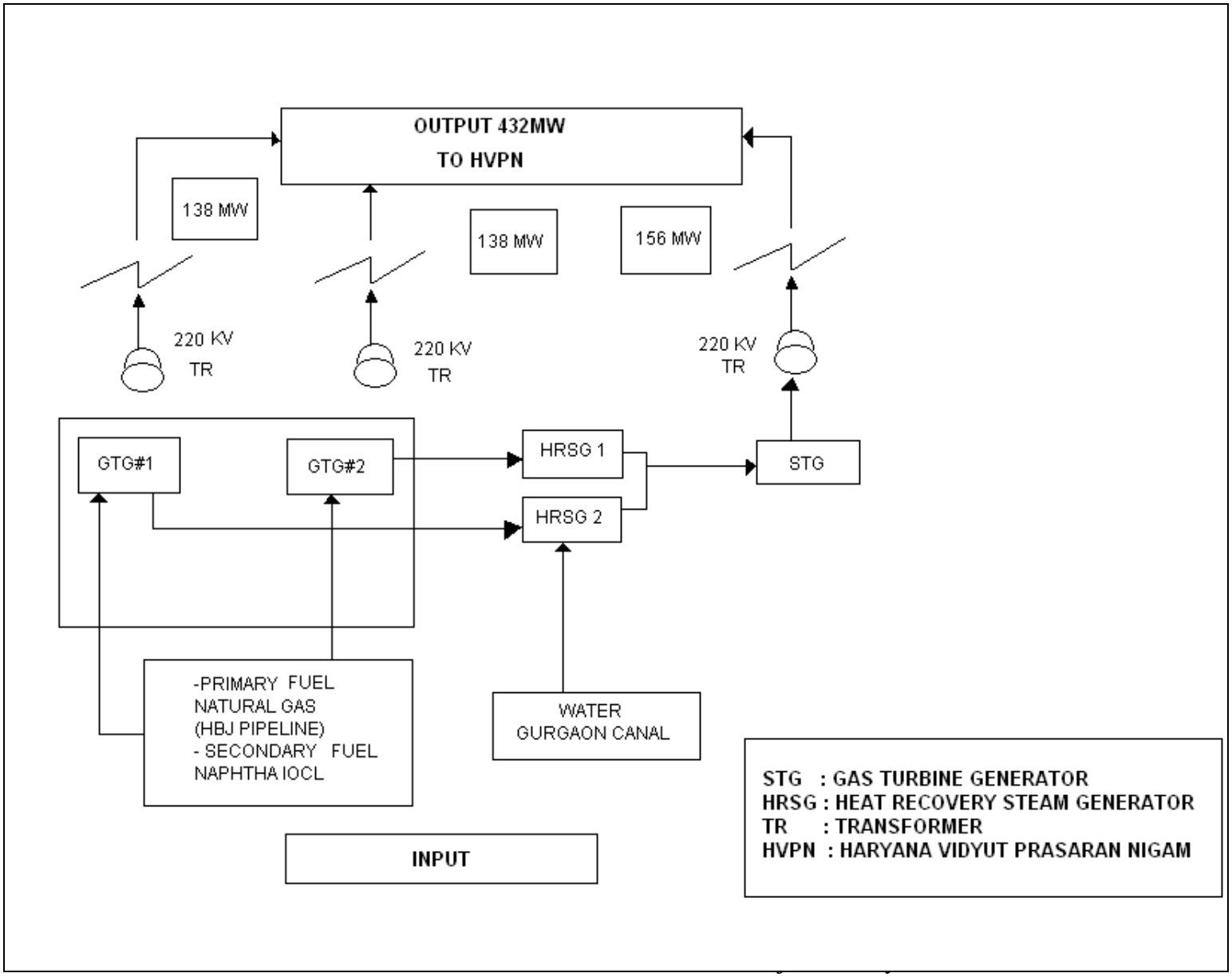

Steam Turbine from BHEL

AUTOMATION AND CONTROL SYSTEM

AUTOMATION: THE DEFINITION

The word automation is widely used today in relation to various types of applications, such as office automation, plant or process automation.

This subsection presents the application of a control system for the automation of a process / plant, such as a power station. In this last application, the automation actively controls the plant during the three main phases of operation: plant start-up, power generation in stable or put During plant start-up and shut-down, sequence controllers as well as long range modulating controllers in or out of operation every piece of the plant, at the correct time and in coordinated modes, taking into account safety as well as overstressing limits.

During stable generation of power, the modulating portion of the automation system keeps the actual generated power value within the limits of the desired load demand.

During major load changes, the automation system automatically redefines new set points and switches ON or OFF process pieces, to automatically bring the individual processes in an optimally coordinated way to the new desired load demand. This load transfer is executed according to pre- programmed adaptively controlled load gradients and in a safe way.

AUTOMATION: THE BENEFITS

The main benefits of plant automation are to increase overall plant availability and efficiency. The increase of these two factors is achieved through a series of features summarized as follows:

- **Optimisation of house load consumption** during plant start- up, shut-down and operation, via:
  - Faster plant start-up through elimination of control errors creating delays.
  - Faster sequence of control actions compared to manual ones. Figures 1 shows the sequence of a rapid restart using automation for a typical coal-fired station. Even a well- trained operator crew would probably not be able to bring the plant to full load in the same time without considerable risks.
  - Co-ordination of house load to the generated power output.

- **Ensure and maintain plant operation**, even in case of disturbances in the control system, via:
  - Coordinated ON / OFF and modulating control switchover capability from a sub process to a redundant one.
  - Prevent sub-process and process tripping chain reaction following a process component trip.

- **Reduce plant / process shutdown time for repair** and maintenance as well as repair costs, via:
  - Protection of individual process components against overstress (in a stable or unstable plant operation).
  - Bringing processes in a safe stage of operation, where process components are protected against overstress

PROCESS STRUCTURE

Analysis of processes in Power Stations and Industry advocates the advisability of dividing the complex overall process into individual sub-processes having distinctly defined functions. This division of the process in clearly defined groups, termed as FUNCTIONAL GROUPS, results in a hierarchical process structure. While the hierarchical structure is governed in the horizontal direction by the number of drives (motorised valves, fans, dampers, pumps, etc.) in other words the size of the process; in the vertical direction, there is a distinction made between three fundamental levels, these being the: -

- Drive Level
- Function Group Level
- Unit Level.

To the Drive Level, the lowest level, belong the individual process equipment and associated electrical drives.

The Function Group is that part of the process that fulfils a particular defined task e.g., Induced Draft Control, Feed Water Control, Blooming Mill Control, etc. Thus at the time of planning it is necessary to identify each function group in a clear manner by assigning it to a particular process activity. Each function group contains a combination of its associated individual equipment drives. The drive levels are subordinate to this level. The function groups are combined to obtain the overall process control function at the Unit Level.

The above three levels are defined with regard to the process and not from the control point of view.

CONTROL SYSTEM STRUCTURE

The primary requirement to be fulfilled by any control system architecture is that it be capable of being organized and implemented on true process-oriented lines. In other words, the control system structure should map on to the hierarchy process structure.

BHEL's PROCONTROL P®, a microprocessor based intelligent remote multiplexing system, meets this requirement completely.

SYSTEM OVERVIEW

The control and automation system used here is a micro based intelligent multiplexing system This system, designed on a modular basis, allows to tighten the scope of control hardware to the particular control strategy and operating requirements of the process

Regardless of the type and extent of process to control provides system uniformity and integrity for:

- Signal conditioning and transmission
- Modulating controls

CONTROL AND MONITORING MECHANISMS

There are basically two types of **Problems faced in a Power Plant**

- **Metallurgical**
- **Mechanical**

Mechanical Problemcan be related to Turbines that is the max speed permissible for a turbine is 3000 rpm , so speed should be monitored and maintained at that level
Metallurgical Problem can be view as the max Inlet Temperature for Turbile is 1060 ^{o}C so temperature should be below the limit.

Monitoring of all the parameters is necessary for the safety of both:

- Employees
- Machines

So the Parameters to be monitored are :

- **Speed**
- **Temperature**
- **Current**
- **Voltage**
- **Pressure**
- **Eccentricity**
- **Flow of Gases**
- **Vaccum Pressure**
- **Valves**
- **Level**
- **Vibration**

www.final-yearprojects.co.cc
www.troubleshoot4free.com/fyp/

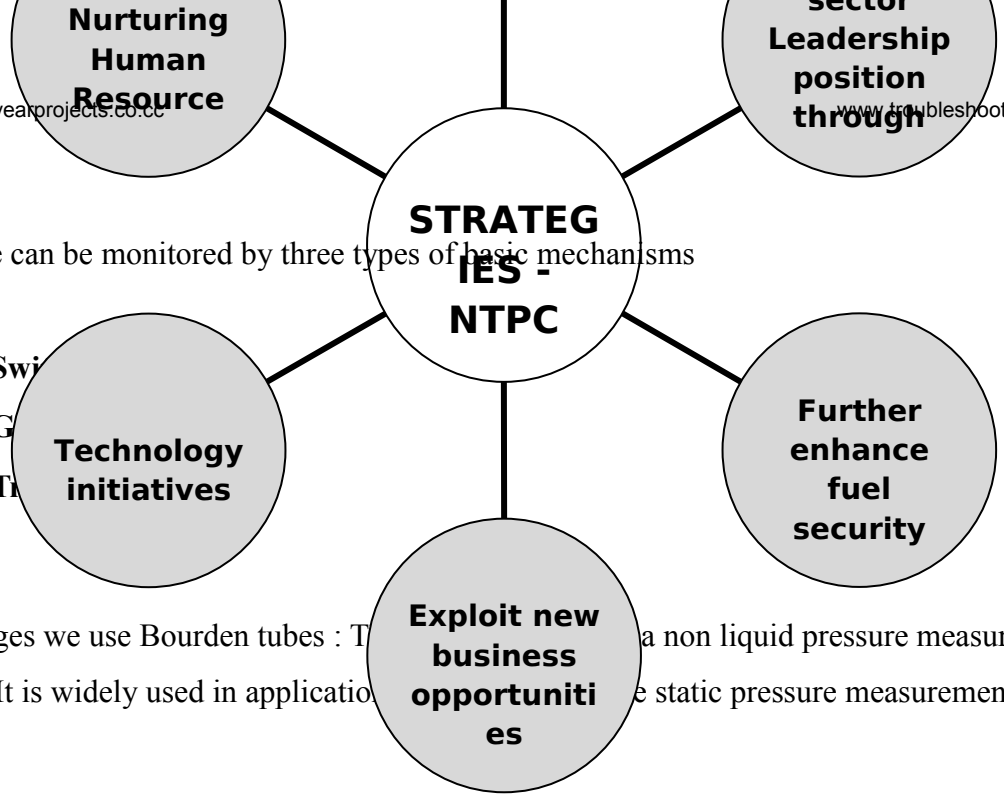

Pressure can be monitored by three types of basic mechanisms

- **Swi**
- **G**
- **Tr**

For gauges we use Bourden tubes : T a non liquid pressure measurement device. It is widely used in applicatio e static pressure measurements are needed.

A typical Bourdon tube contains a curved tube that is open to external pressure input on one end and is coupled mechanically to an indicating needle on the other end, as shown schematically below.

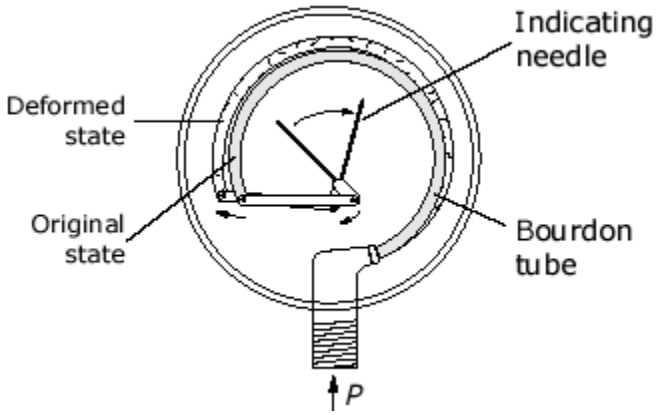

Typical Bourdon Tube Pressure Gages

Transmitter types use transducers (electrical to electrical normally) they are used where continuous monitoring is required

Normally **capacitive transducers** are used

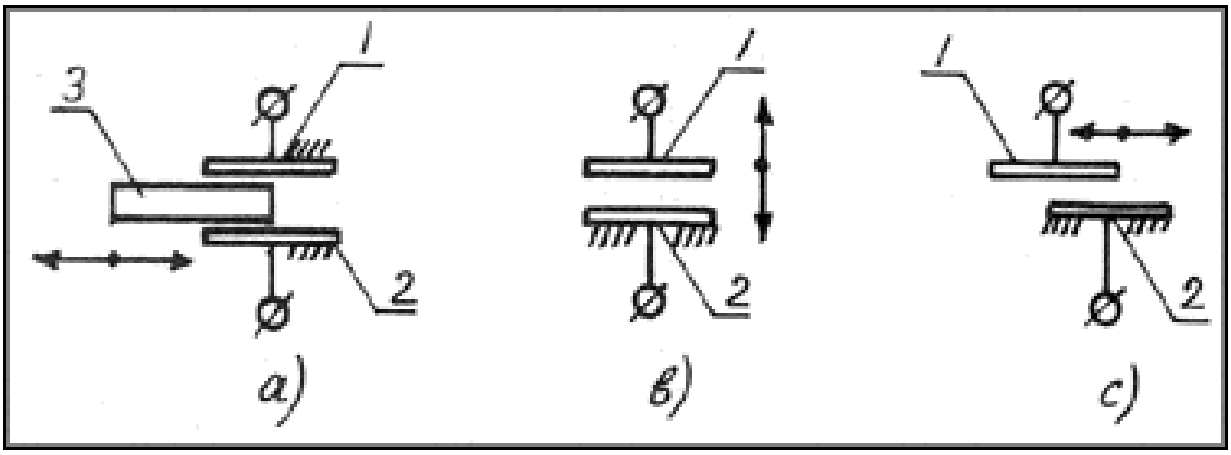

For Switches **pressure swithes** are used and they can be used for digital means of monitoring as swith being ON is referred as high and being OFF is as low.

All the monitored data is converted to either Current or Voltage parameter.

The Plant standard for current and voltage are as under

- **Voltage : 0 – 10 Volts range**
- **Current : 4 – 20 milliAmperes**

We use 4mA as the lower value so as to check for disturbances and wire breaks.

Accuracy of such systems is very high .
ACCURACY : + - 0.1 %

The whole system used is SCADA based

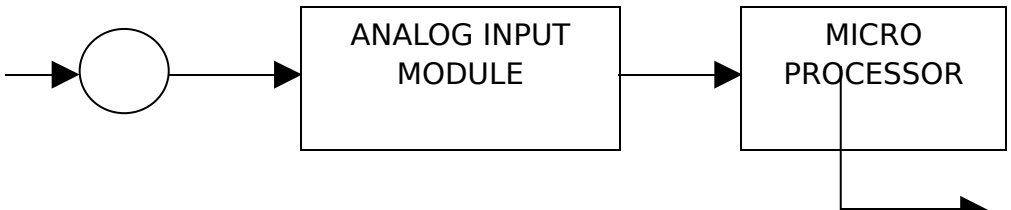

INPUT 4-20 mA

ALARM

We use DDCMIC control for this process.
Programmable Logic Circuits (PLCs) are used in the process as they are the heardt of Instrumentation .

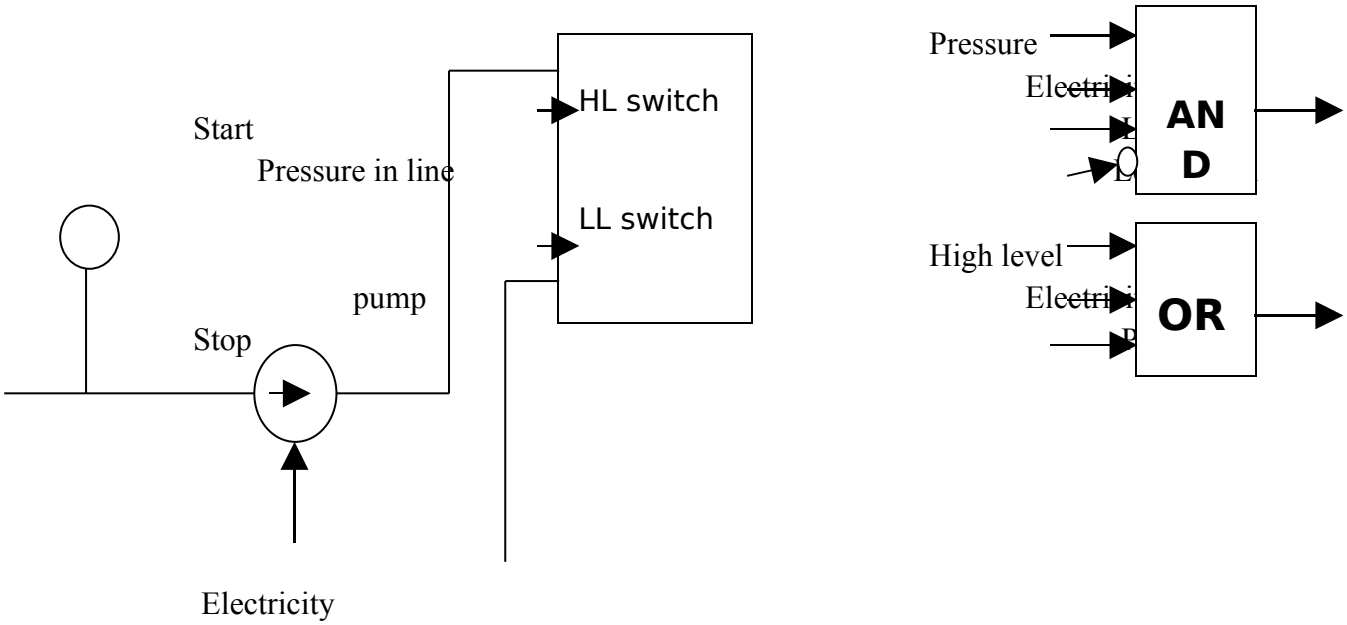

BASIC PRESSURE CONTROL MECHANISM

Hence PLC selection depends upon the Criticality of the Process

TEMPERATURE MONITORING

We can use Thernocouples or RTDs for temperature monitoring

Normally RTDs are used for low temperatures.

Thermocoupkle selection depends upon two factors:

- Temperature Range
- Accuracy Required

Normally used Thermocouple is **K Type Thermocouple**:

Chromel (Nickel-Chromium Alloy) / Alumel (Nickel-Aluminium Alloy)
This is the most commonly used general purpose thermocouple. It is inexpensive and, owing to its popularity, available in a wide variety of probes. They are available in the −200 °C to +1200 °C range. **Sensitivity** is approximately 41 μV/°C.

RTDs are also used but not in protection systems due to vibrational errors.

We pass a constant curre t through the RTD. So that if R changes then the Voltage also changes

RTDs used in Industries are Pt_{100} and Pt_{1000}

Pt_{100} : 0 ^{0}C – 100 Ω (1 Ω = 2.5 ^{0}C)
Pt_{1000} : 0 ^{0}C - 1000Ω
Pt_{1000} is used for higher accuracy

The gauges used for Temperature measurements are mercury filled Temperature gauges.

For Analog medium thermocouples are used
And for Digital medium Switches are used which are basically mercury switches.

FLOW MEASUREMENT

Flow measurement does not signify much and is measured just for metering purposes and for monitoring the processes

ROTAMETERS:

A Rotameter is a device that measures the flow rate of liquid or gas in a closed tube. It is occasionally misspelled as 'rotometer'.

It belongs to a class of meters called variable area meters, which measure flow rate by allowing the cross sectional area the fluid travels through to vary, causing some measurable effect.

A rotameter consists of a tapered tube, typically made of glass, with a float inside that is pushed up by flow and pulled down by gravity. At a higher flow rate more area (between the float and the tube) is needed to accommodate the flow, so the float rises. Floats are made in many different shapes, with spheres and spherical ellipses being the most common. The float is shaped so that it rotates axially as the fluid passes. This allows you to tell if the float is stuck since it will only rotate if it is not.

For Digital measurements Flap system is used.

For Analog measurements we can use the following methods :

- **Flowmeters**
- **Venurimeters / Orifice meters**
- **Turbines**
- **Massflow meters** (oil level)
- **Ultrasonic Flow meters**
- **Magnetic Flowmeter** (water level)

Selection of flow meter depends upon the purpose , accuracy and liquid to be measured so different types of meters used.
Turbine type are the simplest of all.

They work on the principle that on each rotation of the turbine a pulse is generated and that pulse is counted to get the flow rate.

VENTURIMETERS :

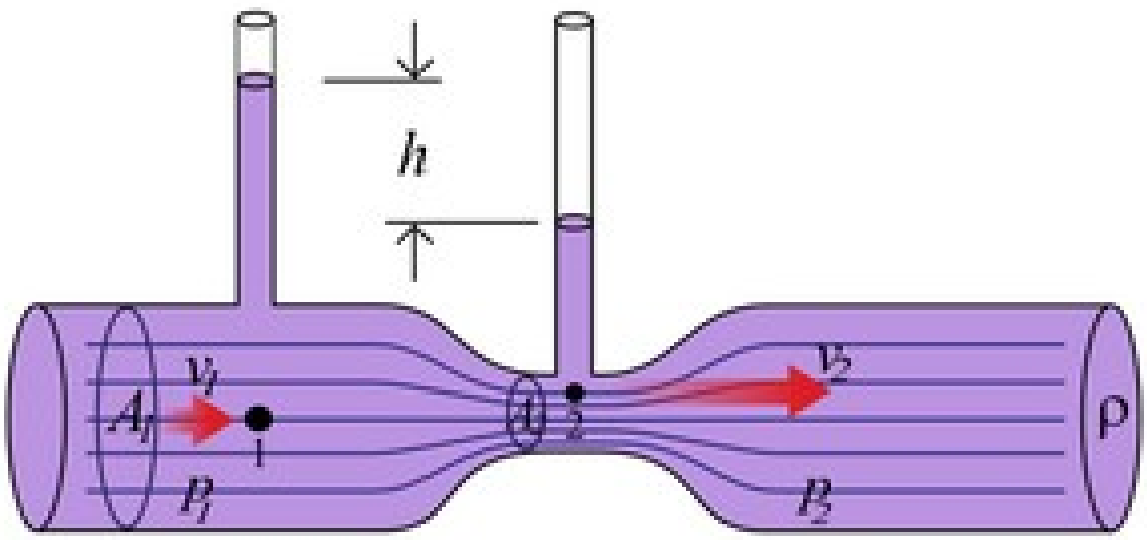

Referring to the diagram, using Bernoulli's equation in the special case of incompressible fluids (such as the approximation of a water jet), the theoretical pressure drop at the constriction would be given by $(\rho/2)(v_2^2 - v_1^2)$.

And we know that rate of flow is given by:

Flow = k √ (D.P)

Where DP is Differential Presure or the Pressure Drop.

CONTROL VALVES

A valve is a device that **regulates the flow of substances** (either gases, fluidized solids, slurries, or liquids) by opening, closing, or partially obstructing various passageways. Valves are technically pipe fittings, but usually are discussed separately.

Valves are used in a variety of applications including industrial, military, commercial, residential, transportation. Plumbing valves are the most obvious in everyday life, but many more are used.

Some valves are driven by pressure only, they are mainly used for safety purposes in steam engines and domestic heating or cooking appliances. Others are used in a controlled way, like in Otto cycle engines driven by a camshaft, where they play a major role in engine cycle control.

Many valves are controlled manually with a handle attached to the valve stem. If the handle is turned a quarter of a full turn (90°) between operating positions, the valve is called a quarter-turn valve. Butterfly valves, ball valves, and plug valves are often quarter-turn valves. Valves can also be controlled by devices called actuators attached to the stem. They can be electromechanical actuators such as an electric motor or solenoid, **pneumatic actuators** which are controlled by air pressure, or **hydraulic actuators** which are controlled by the pressure of a liquid such as oil or water.

So there are basically three types of valves that are used in power industries besides the handle valves. They are :

- **Pneumatic Valves** – they are air or gas controlled which is compressed to turn or move them
- **Hydraulic valves** – they utilize oil in place of Air as oil has better compression
- **Motorised valves** – these valves are controlled by electric motors