JAGRAN Josh

Simplifying Test Prep

WWW.JAGRANJOSH.COM

SSC Junior Engineering Exam 2013 Question Paper: Paper II

TA 1326413

BI 2013

GENERAL ENGINEERING / सामान्य इंजीनियरी

PAPER II / प्रश्न-पत्र II

Time allowed : 2 Hours | *Maximum Marks : 300*

निर्धारित समय : दो घण्टे | *अधिकतम अंक : 300*

Attention :

1. *Paper consists of **Part A** (Civil and Structural) and **Part B** (Electrical) and **Part C** (Mechanical) and only one Part is to be attempted as per option given in the Application Form. Candidates should attempt **5 questions in all**. All questions carry **equal** marks.*
2. *Each candidate will be **given one** Answer Book.*
3. *Answers to all questions must be written in one language, i.e., either in English or in Hindi according to the option given by the candidate in his/her Application Form. Candidates are not allowed to write the answers partly in English and partly in Hindi.*
4. *Candidates must write their Name, Roll No., Ticket No., Name of the Examination and Subject at the prescribed place on the cover page of the Answer Book correctly. Candidates must also put their signature, and left hand thumb impression on the cover page at the prescribed place. The above instructions must be fully complied with failing which the Answer Book will not be evaluated and **zero** mark will be awarded.*
5. *No credit will be given for answers written in a language other than the one opted by the candidate.*
6. *Necessary tables of IS 456 : 2000 Code of Practice are given at the end of Part A for use of candidates attempting Civil and Structural part.*
7. ***"Mobile phones and wireless communication devices are completely banned in the examination halls/rooms. Candidates are advised not to keep mobile phones/any other wireless communication devices with them, even switching it off, in their own interest. Failing to comply with this provision will be considered as using unfair means in the examination and action will be taken against them including cancellation of their candidature."***

SEAL

ध्यान दीजिए :

1. *प्रश्न-पत्र में भाग क (सिविल एवं संरचनात्मक) और भाग ख (विद्युत) एवं भाग ग (यांत्रिक) और आवेदन-पत्र में दिए गए विकल्प के अनुसार केवल एक भाग का ही उत्तर दिया जाना है । अभ्यर्थियों को **कुल पाँच प्रश्नों** का उत्तर देना है । सभी प्रश्नों के अंक **बराबर** हैं ।*
2. *प्रत्येक अभ्यर्थी को केवल **एक उत्तर-पुस्तिका** दी जाएगी ।*
3. *सभी प्रश्नों के उत्तर अभ्यर्थी द्वारा अपने आवेदन-पत्र में दिए गए विकल्प के अनुसार किसी एक भाषा में अर्थात् अंग्रेजी या हिन्दी में, दिए जाने चाहिए । अभ्यर्थियों को कुछ उत्तर अंग्रेजी में और कुछ उत्तर हिन्दी में लिखने की अनुमति नहीं है ।*
4. *अभ्यर्थी उत्तर-पुस्तिका के आवरण पृष्ठ पर निर्धारित स्थान में अपना नाम, रोल नंबर, टिकट नंबर, परीक्षा का नाम तथा विषय सही-सही अवश्य लिखें । अभ्यर्थी आवरण पृष्ठ पर निर्धारित स्थान में अपने हस्ताक्षर एवं बाएँ हाथ के अँगूठे का निशान भी अवश्य लगाएँ । उपर्युक्त अनुदेशों का पूरी तरह अनुपालन किया जाए, अन्यथा उत्तर-पुस्तिका को नहीं जाँचा जाएगा और **शून्य** अंक दे दिया जाएगा ।*
5. *अभ्यर्थी द्वारा दिए गए विकल्प की भाषा के अतिरिक्त किसी अन्य भाषा में दिए गए उत्तरों के लिए कोई अंक नहीं दिए जाएँगे ।*
6. *सिविल एवं संरचनात्मक भाग की परीक्षा देने वाले अभ्यर्थियों के प्रयोग के लिए आई.एस. 456 : 2000 प्रेक्टिस कोड की आवश्यक सारणियाँ भाग क के अन्त में दी गई हैं ।*
7. ***"परीक्षा हालों/कमरों में मोबाइल फोन तथा बेतार संचार साधन पूरी तरह निषिद्ध है । प्रत्याशियों को उनके अपने हित में सलाह दी जाती है कि मोबाइल फोन/किसी अन्य बेतार संचार साधन को स्विच ऑफ करके भी अपने पास न रखें । इस प्रावधान का अनुपालन न करने को परीक्षा में अनुचित उपायों का प्रयोग माना जाएगा और उनके विरुद्ध कार्रवाई की जाएगी, उनकी अभ्यर्थिता रद्द कर देने सहित ।"***

PART A

General Engineering

(CIVIL AND STRUCTURAL)

1. (a) Write a short note on Night Irrigation. *15*

(b) Give a brief account of the drawbacks in Kennedy's theory. *15*

(c) For a Highway project, a straight tunnel is to be run between two points P and Q whose co-ordinates are given below :

Point	Co-ordinates	
	N	E
P	0	0
Q	4020	800
R	2110	1900

It is desired to sink a shaft at S, the mid-point of PQ. S is to be fixed from R, the third known point. Calculate

(i) The co-ordinates of S

(ii) The length of RS

(iii) The bearing of RS *15*

(d) Find out the time required for 50% consolidation in a soil having thickness of 800 cm and pervious strata at top and bottom. What will be the value of coefficient of consolidation if coefficient of permeability = 0·0000001 cm/sec ? *15*

Void ratio = 1·8 = m_v = 0·0003 cm^2/gm

Time factor (T_v) = 0·3

γ_w = 1 gm/cc

2. (a) Calculate the ultimate bearing capacity per unit area of :

(i) A strip footing 1 m wide

(ii) A square footing 3 m × 3 m

(iii) A circular footing of diameter 3 m

Given :

Unit weight of the soil 1·8 t/m^3, cohesion = 2 t/m^2 and φ = 20 degree. N_c = 17·5, N_q = 7·5 and N_r = 5. *15*

(b) Calculate the discharge through a pipe of dia. 200 mm when the difference of pressure head between two ends of a pipe 500 m apart is 4 m of water. Take the value of f = 0·009 in the formula $h_f = \frac{4 . f . L . V^2}{d . 2g}$. 15

(c) Compare and contrast Flexible and Rigid pavements. 15

(d) Discuss the impact of Urbanisation and Industrialisation in water resource (in terms of both quantity and quality). 15

3. (a) The annual sinking fund of a machine costing ₹ 50,000 is ₹ 150 and its salvage value is estimated to be ₹ 5,000. Assuming interest rate as 4%, determine the life of the machine. 20

(b) Describe the factors affecting the rate analysis. 10

(c) Write a short note on the classification of bricks. 15

(d) Discuss the constituent parts of paint and their functions. 15

4. (a) List the physical tests that are generally used on cement. Describe any three of them. 15

(b) Discuss the relation between water-cement ratio and strength. 15

(c) Design a cantilever beam which projects beyond the fixed end by 3 m. The superimposed load on it is 10 kN/m. Use M 20 grade (σ_{cbc} = 7 N/mm^2) of concrete and Fe 415 steel (σ_{st} = 230 N/mm^2). Assume moderate exposure conditions. 30

5. A simply supported 18 m effective span RCC rectangular beam of 500 mm × 1500 mm (overall depth) section is reinforced throughout with 21 nos. 25 mm diameter bars in three layers of 7 bars each at a clear cover of 37·5 mm on tensile face. The reinforcement on the compression face is 4 – 25 mm + 1 – 20 mm diameter bars in one layer at an effective cover of 50 mm. The clear cover between the different layers on tension face is 25 mm. M 25 grade concrete and Fe 415 grade steel bars are used in the beam throughout. The beam is laterally restrained throughout the span.

(a) What shall be the superimposed uniformly distributed load w, that the beam can carry at working conditions ? 15

(b) Design the shear reinforcement at support if design shear strength of concrete τ_c is given as follows for different values of $p = 100 A_s / bd$. 15

P	1·25	1·5	1·75
τ_c (MPa)	0·70	0·74	0·78

(c) Calculate the moment of resistance of the compound steel section shown in the figure. The compound section consists of two steel sections ISMB 200 @ 25·4 kg/m (I_{XX} = 2235·4 cm^4, A_{XX} = 32·33 cm^2) with a single cover plate, 40 cm wide and 16 mm thick connected to the top flange.
Assume bending stress = 150 MPa. *15*

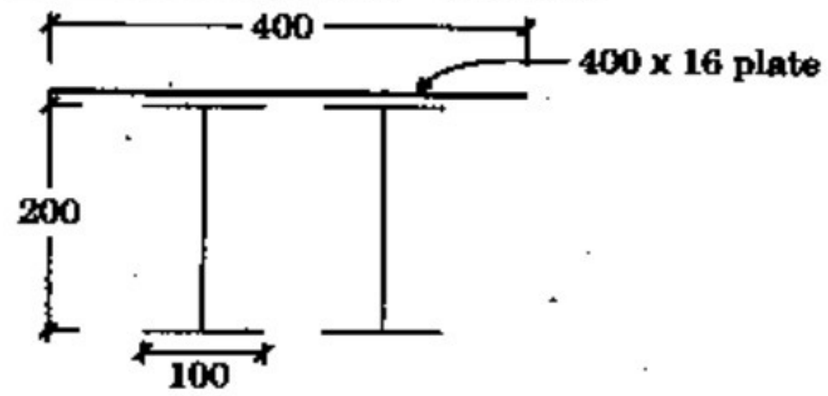

Dimensions in mm

(d) A mild steel T section has the following cross-sectional dimensions :
Total depth = 200 mm
Width of flange = 120 mm
Thickness of flange = 20 mm
Thickness of web = 20 mm
If the yield stress, σ_y = 250 MPa, determine the plastic moment capacity of the section. Also calculate the shape factor for the section. *15*

6. (a) Analyze the beam shown in figure and determine the end moments. Plot the B.M.D. on the tension side. *30*

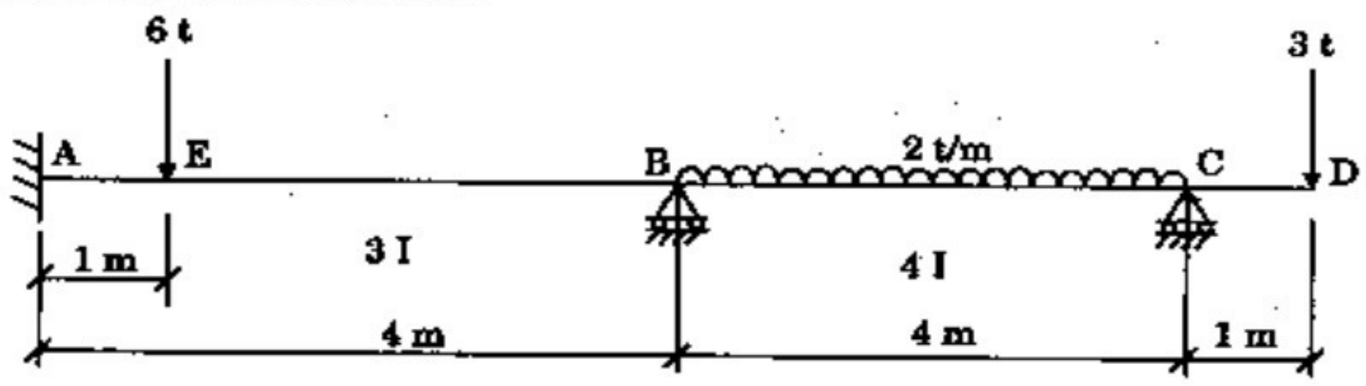

(b) Analyze the portal frame shown in the figure. Also sketch the deflected shape of the frame. The end A is fixed and the end D is hinged. Also, the value of EI is constant throughout. *30*

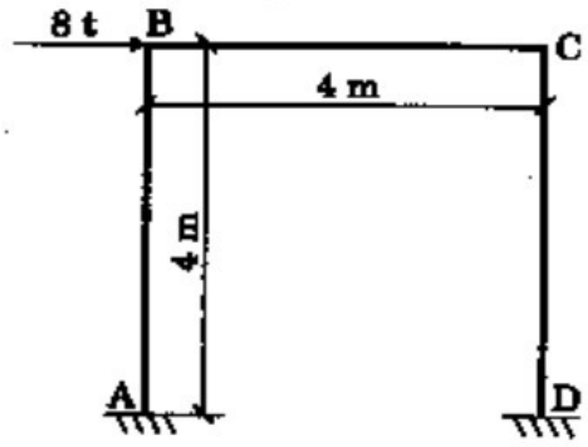

Essential Tables of IS : 456 : 2000 Code of Practice

26.2.1.1 Design bond stress in limit state method for plain bars in tension shall be as below :

Grade of concrete	M 20	M 25	M 30	M 35	M 40 and above
Design bond stress, τ_{bd}, N/mm^2	1·2	1·4	1·5	1·7	1·9

Table 16 : Nominal Cover to Meet Durability Requirements

(Clause 26.4.2)

Exposure	*Nominal Concrete Cover in mm Not Less Than*
Mild	20
Moderate	30
Severe	45
Very severe	50
Extreme	75

Notes :

1. For main reinforcement up to 12 mm diameter bar for mild exposure the nominal cover may be reduced by 5 mm.

2. Unless specified otherwise, actual concrete cover should not deviate from the required nominal cover by $^{+10}_{0}$ mm.

3. For exposure condition 'severe' and 'very severe', reduction of 5 mm may be made, where concrete grade is M 35 and above.

IS 456 : 2000

Table 19 : Design Shear Strength of Concrete, τ_c, N/mm^2

(Clauses 40.2.1, 40.2.2, 40.3, 40.4, 40.5.3, 41.3.2, 41.3.3 and 41.4.3)

$100 \frac{A_s}{bd}$	Concrete Grade					
	M 15	M 20	M 25	M 30	M 35	M 40 and above
(1)	(2)	(3)	(4)	(5)	(6)	(7)
≤ 0·15	0·28	0·28	0·29	0·29	0·29	0·30
0·25	0·35	0·36	0·36	0·37	0·37	0·38
0·50	0·46	0·48	0·49	0·50	0·50	0·51
0·75	0·54	0·56	0·57	0·59	0·59	0·60
1·00	0·60	0·62	0·64	0·66	0·67	0·68
1·25	0·64	0·67	0·70	0·71	0·73	0·74
1·50	0·68	0·72	0·74	0·76	0·78	0·79
1·75	0·71	0·75	0·78	0·80	0·82	0·84
2·00	0·71	0·79	0·82	0·84	0·86	0·88
2·25	0·71	0·81	0·85	0·88	0·90	0·92
2·50	0·71	0·82	0·88	0·91	0·93	0·95
2·75	0·71	0·82	0·90	0·94	0·96	0·98
3·00 and above	0·71	0·82	0·92	0·96	0·99	1·01

Note : The term A_s is the area of longitudinal tension reinforcement which continues at least one effective depth beyond the section being considered except at support where the full area of tension reinforcement may be used provided the detailing conforms to 26.2.2 and 26.2.3.

Table 20 : Maximum Shear Stress, $\tau_{c\,max}$, N/mm^2

(Clauses 40.2.3, 40.2.3.1, 40.5.1 and 41.3.1)

Concrete Grade	M 20	M 25	M 30	M 35	M 40 and above
$\tau_{c\,max}$, N/mm^2	2·8	3·1	3·5	3·7	4·0

IS 456 : 2000

Table 21 : Permissible Stresses in Concrete

(Clauses B-1.3, B-2.1, B-2.1.2, B-2.3 and B-4.2)

All values in N/mm^2

Grade of Concrete	Permissible Stress in Compression		Permissible Stress in Bond (Average) for Plain Bars in Tension
	Bending	Direct	
(1)	(2)	(3)	(4)
	σ_{cbc}	σ_{cc}	τ_{bd}
M 10	3·0	2·5	–
M 15	5·0	4·0	0·6
M 20	7·0	5·0	0·8
M 25	8·5	6·0	0·9
M 30	10·0	8·0	1·0
M 35	11·5	9·0	1·1
M 40	13·0	10·0	1·2
M 45	14·5	11·0	1·3
M 50	16·0	12·0	1·4

Notes :

1. The values of permissible shear stress in concrete are given in Table 23.
2. The bond stress given in col. 4 shall be increased by 25 percent for bars in compression.

IS 456 : 2000

Table 23 : Permissible Shear Stress in Concrete

(Clauses B-2.1, B-2.3, B-4.2, B-5.2.1, B-5.2.2, B-5.3, B-5.4, B-5.5.1, B-5.5.3, B-6.3.2, B-6.3.3 and B-6.4.3 and Table 21)

$100 \frac{A_s}{bd}$	*Permissible Shear Stress in Concrete, τ_c, N/mm²* — *Grade of Concrete*					
	M 15	M 20	M 25	M 30	M 35	M 40 and above
(1)	(2)	(3)	(4)	(5)	(6)	(7)
≤ 0·15	0·18	0·18	0·19	0·20	0·20	0·20
0·25	0·22	0·22	0·23	0·23	0·23	0·23
0·50	0·29	0·30	0·31	0·31	0·31	0·32
0·75	0·34	0·35	0·36	0·37	0·37	0·38
1·00	0·37	0·39	0·40	0·41	0·42	0·42
1·25	0·40	0·42	0·44	0·45	0·45	0·46
1·50	0·42	0·45	0·46	0·48	0·49	0·49
1·75	0·44	0·47	0·49	0·50	0·52	0·52
2·00	0·44	0·49	0·51	0·53	0·54	0·55
2·25	0·44	0·51	0·53	0·55	0·56	0·57
2·50	0·44	0·51	0·55	0·57	0·58	0·60
2·75	0·44	0·51	0·56	0·58	0·60	0·62
3·00 and above	0·44	0·51	0·57	0·60	0·62	0·63

Note : A_s is the area of longitudinal tension reinforcement which continues at least one effective depth beyond the section being considered except at support where the full area of tension reinforcement may be used provided the detailing conforms to 26.2.2 and 26.2.3.

Table 24 : Maximum Shear Stress, $\tau_{c\,max}$, N/mm²

(Clauses B-5.2.3, B-5.2.3.1, B-5.5.1 and B-6.3.1)

Concrete Grade	M 15	M 20	M 25	M 30	M 35	M 40 and above
$\tau_{c\,max}$, N/mm²	1·6	1·8	1·9	2·2	2·3	2·5

PART B

General Engineering

(ELECTRICAL)

1. (a) (i) An oven operates on a 15·0 A current from a 120 V source. How much energy will it consume in 3·0 h of operation ? *10*

(ii) How many 100 W light bulbs connected to a 120 V supply can be turned on at the same time without blowing a 15·0 A fuse ? *10*

(iii) 3·0 A, 125 V circuit contains a 10·0 W resistor. What resistance must be added in series for the circuit to have a current of 5·0 A ? *10*

(b) In the following circuit, find the total resistance, R_3, V_2 and I_4. *30*

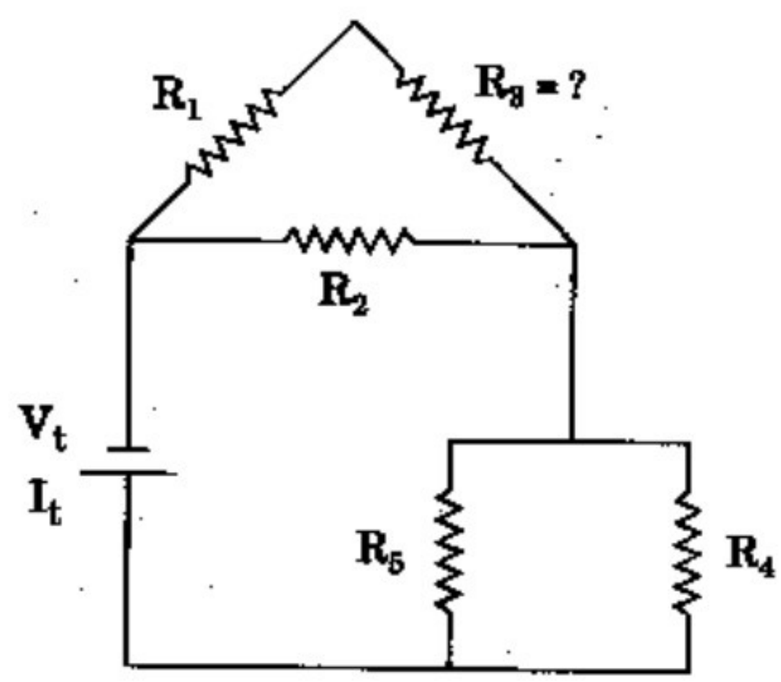

$R_1 = 9\ \Omega$

$R_2 = 4\ \Omega$

$R_4 = 12\ \Omega$

$R_5 = 36\ \Omega$

$V_t = 12$ V

$I_t = 1{\cdot}0$ A

2. (a) What do you understand by magnetic hysteresis ? Differentiate between hard and soft magnetic materials. *30*

(b) Deduce an expression for the average power in a single phase RL circuit and hence explain the term power factor. *30*

3. (a) Describe the working principle and construction of an induction type wattmeter. What are the errors in induction type wattmeter, and how are they compensated ? 30

(b) The four arms of a Maxwell A.C. bridge are as follows :

AB and BC are non-inductive resistors of 100 Ω each, DA is a standard variable inductor L of resistance 32·7 Ω and CD comprises a standard variable resistor R in series with a coil of unknown impedance. Balance is obtained when L = 47·8 mH and R = 1·36 Ω. Find the resistance and inductance of the coil. 30

4. (a) (i) What are the factors that control the speed of a DC motor ? 10

(ii) A 500 V shunt motor runs at its normal speed of 250 rpm when the armature current is 200 A. The resistance of armature is 0·12 Ω. Calculate the speed when a resistance is inserted in the field reducing the shunt field to 80% of normal value and the armature current is 100 A. 20

(b) A three phase induction motor having a 6-pole, star connected stator winding runs on 240 V, 50 Hz supply. The rotor resistance and standstill reactance are 0·12 Ω and 0·85 ohm per phase. The ratio of stator to rotor turns is 1·8. Full load slip is 4%. Calculate the developed torque at full load. 30

5. (a) What is loss load factor ? Explain in detail how the loss load factor can be determined. 30

(b) Discuss various bus bar systems for distribution networks. 30

6. (a) Discuss the laws of illumination and their limitations in actual practice. 30

(b) Draw the output characteristics of a common-emitter transistor. Show various regions of operation of the BJT on this characteristic. Describe the applications of operating the BJT into different regions. 30

PART C
General Engineering
(MECHANICAL)

1. (a) Define four bar chain mechanism and state the Grashof's Law for the four bar chain linkage. *15*

(b) Compare the functions of flywheel and mechanical governor. *15*

(c) Determine power lost in overcoming friction and number of collars required for the thrust bearing whose contact surfaces have 20 cm and 15 cm as external and internal radius. The coefficient of friction is 0·08 between the surfaces. The total axial load is 30 kN. The intensity of pressure cannot exceed 3·5 bar and the shaft rotates with 420 rpm. *15*

(d) With the help of neat sketch define pressure angle for gear train and cam follower mechanisms. *15*

2. (a) A cantilever of length 5 m is loaded as shown in figure below. Draw the shear force and bending moment diagrams for the cantilever beam. *15*

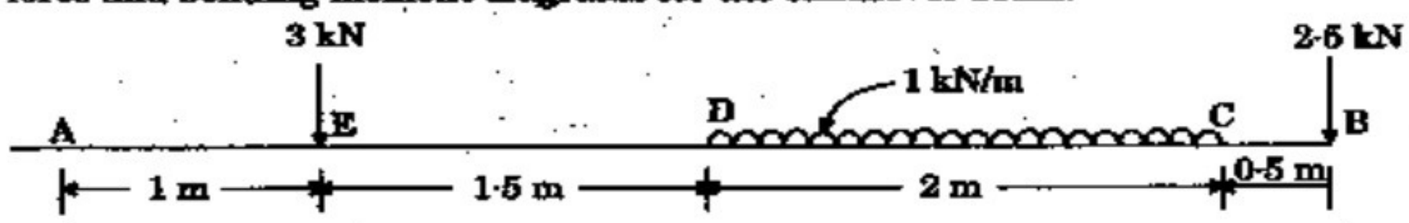

(b) Determine the maximum shear stress induced in a solid circular shaft of diameter 15 cm when the shaft transmits 150 kW power at 180 rpm. *15*

(c) A thin walled pressure cylinder of internal diameter 1·25 m contains a fluid at an internal pressure of 2 N/mm^2. Determine the maximum thickness of the cylinder if : *15*

(i) The longitudinal stress is not to exceed 30 N/mm^2

(ii) The circumferential stress is not to exceed 45 N/mm^2

(d) Write the assumptions made in the Euler's column theory and define slenderness ratio. *10+5*

3. (a) With the help of P – V and T – s diagrams, describe Diesel Cycle. *15*

(b) Explain the vapour compression cycle with the help of flow, T – s and p – h diagrams. *15*

(c) Compare the fire tube and water tube boilers. *15*

(d) A cyclic heat engine operates between a source temperature of 723°C and sink temperature of 28°C. What is the least rate of heat rejection per kW net output of the engine ? Also show the block diagram. *15*

4. (a) An inverted U-tube has been used to determine the difference of pressure in two pipes carrying water as shown in figure.

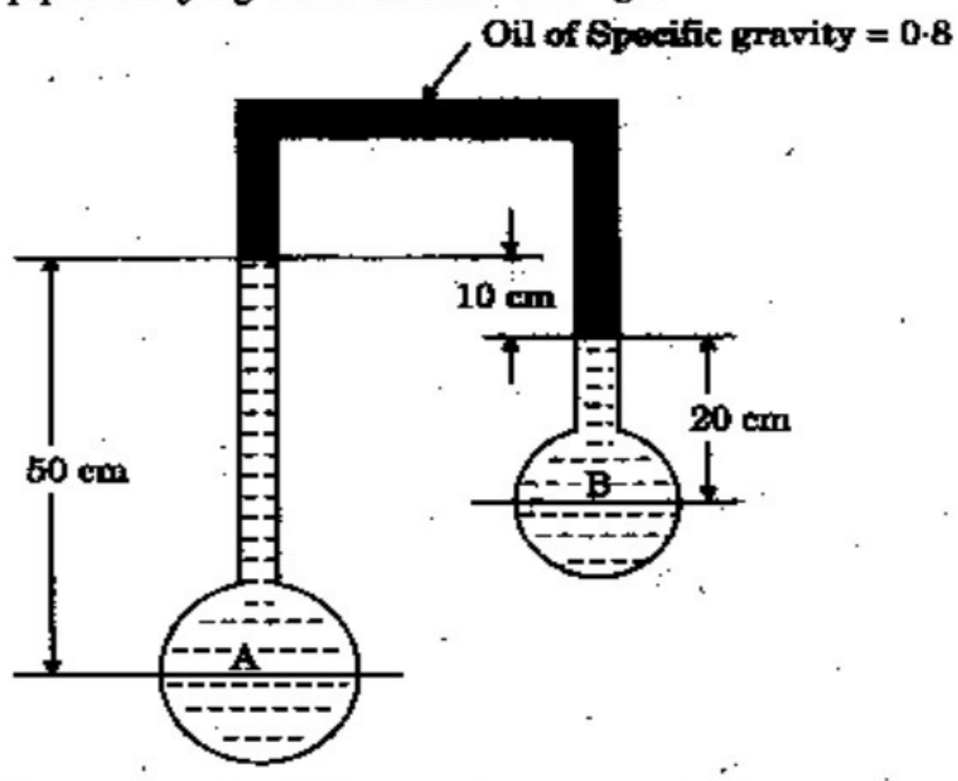

Determine the difference of pressures in the two pipes in terms of head of water and N/cm^2, if the difference of liquid level in inverted U-tube be 10 cm. 15

(b) A venturimeter has an area ratio of 9 to 1, the larger diameter being 30 cm. During the flow, the recorded pressure head in the larger section is 6·5 metres and that at the throat 4·25 metres. If the meter coefficient, C is 0·99, compute the discharge through the meter. 15

(c) Differentiate between impulse turbine and reaction turbine. 15

(d) State the Bernoulli's theorem and write its limitations. 15

5. (a) Describe the following heat treatment processes of steel : 15

(i) Annealing
(ii) Normalizing
(iii) Case hardening

(b) With the help of neat sketch, describe a single point cutting tool and its signature according to American Standard System. 15

(c) With the help of neat sketch, describe TIG and MIG. 15

(d) Discuss various defects in castings based on (i) Melting and pouring of molten metals and (ii) Gating and risering of mould. 15

6. (a) Briefly discuss the grinding wheel characteristics. 15

(b) Compare the involute and cycloidal profiles of gear tooth. 15

(c) Draw and briefly describe the Mollier's Chart. 15

(d) State Kelvin – Planck and Clausius statement of 2nd Law of thermodynamics. 15